EXPLODED DRAWING—Model No. GZFW2031.3

R0106A

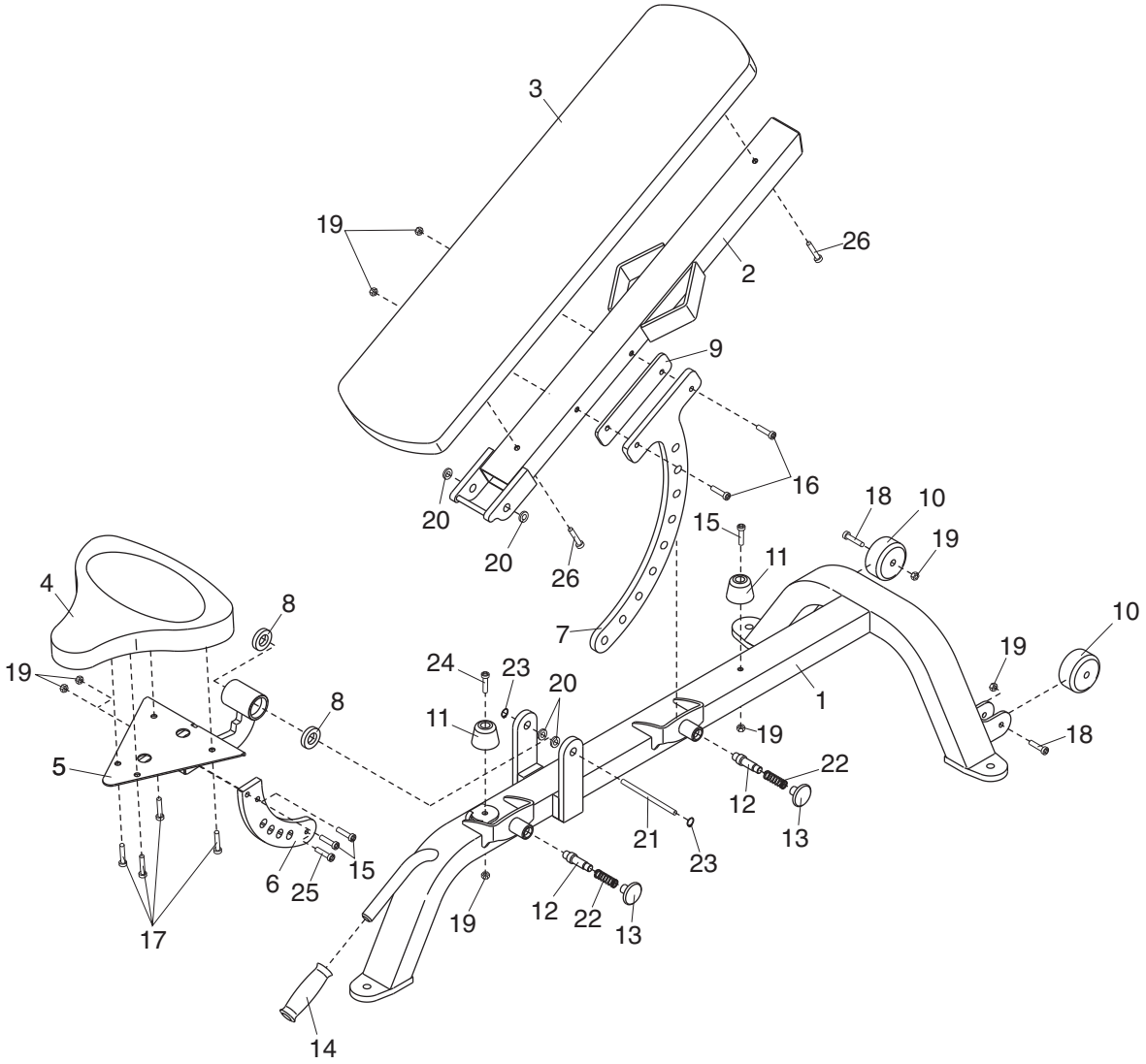

Bubble #	OEM Number	Description	
3	GZ5108-10	BACKREST	
4	GZ5108-25	SEAT	
10	GZ1112	WHEEL	
12	GZ3352	ADJUSTMENT PIN	
13	GZ3350	ADJUSTMENT KNOB	
14	GZ1032-01	RUBBER GRIP	
15	GZ1014-02	3/8" X 3" BOLT	
17	GZ1014-01	3/8" X 1" NON-PATCH BOLT	
18	GZ1013-13	3/8" X 2 3/4" BOLT	
19	GZ1007	3/8" NYLON LOCKNUT	
22	285751	SPRING	
23	GZ1018-05	5/8" RETAINER RING	
24	GZ1014-03	3/8" X 4" BOLT	
25	GZ1013-15	3/8" X 1/2" BOLT	
26	GZ1014-02	3/8" X 3" NON-PATCH BOLT	
#	GZ7350	USER'S MANUAL	
11A	GZ1111	LARGE BUMPER	
11B	142324	BUMPER	